- **Adrian Penfold**
- **Environment and Planning Director**
- **British Land**

Property and Climate Change

Adrian Penfold

Head of Planning and Environment

The British Land Company PLC

1. Introduction

2. Drivers of Change

3. Industry Response

Earth's surface temperature : year 1000 to year 2100

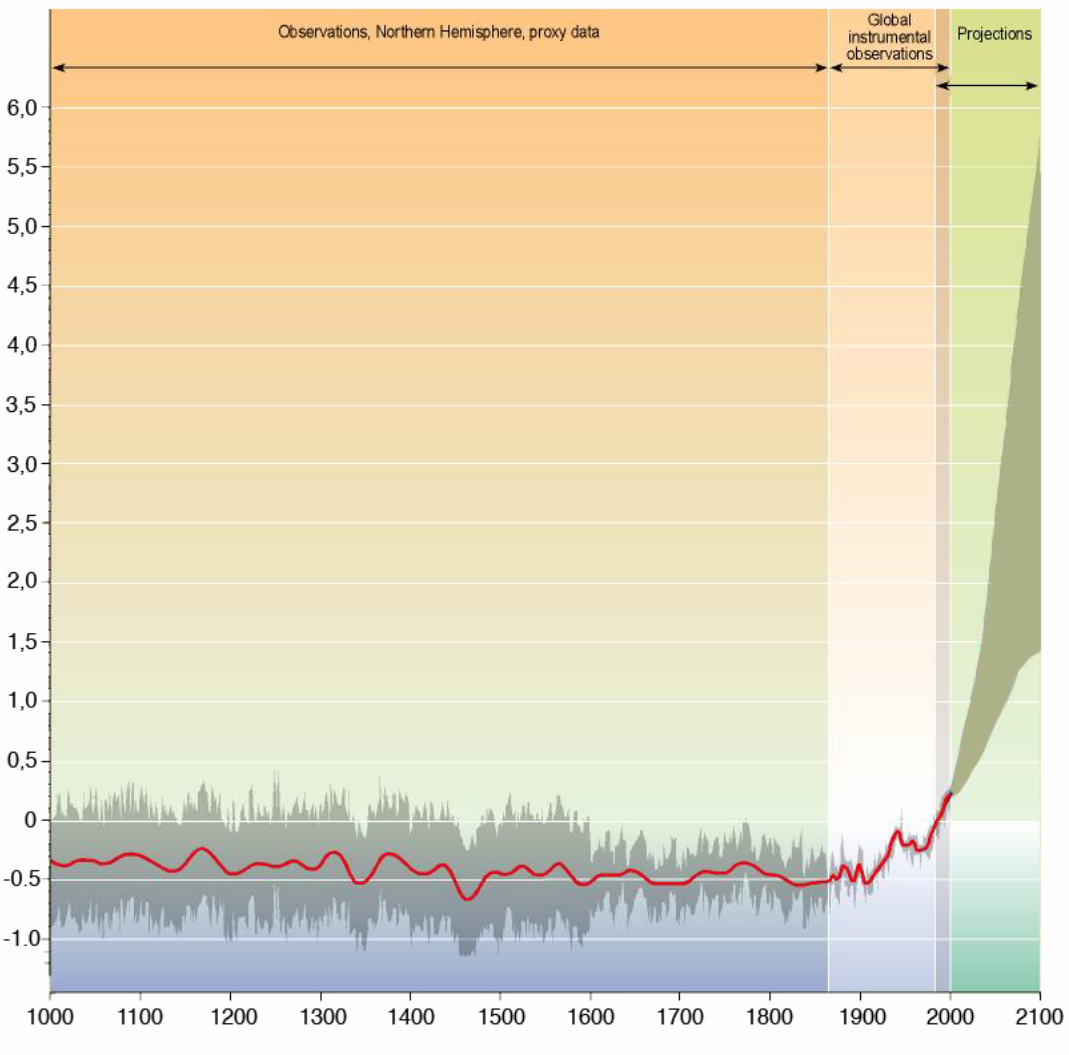





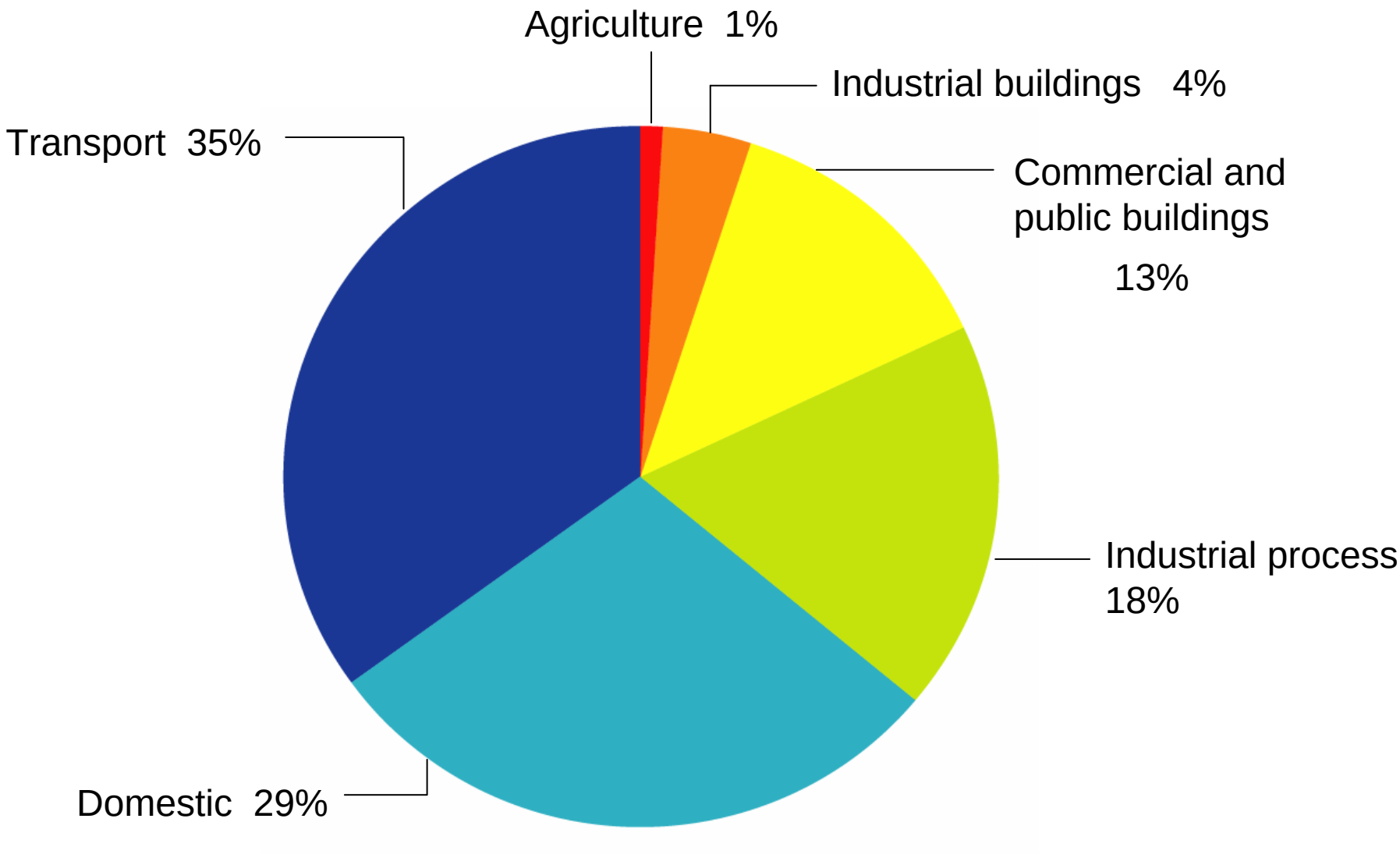
Agriculture 1%
Industrial buildings 4%
Transport 35%
Commercial and public buildings 13%
Industrial process 18%
Domestic 29%



Svalbard,
Norway

Radiohead


REVOLUTION


Dry
Wash
Rinse
Energy
Manufacturer
Model
More efficient
A
B
C
D
E
F
G
A


THE TIMES
No. 68724 ■ MONDAY JUNE 12 2006 ■ NEWSPAPER OF THE YEAR
Energy ratings will devalue old houses

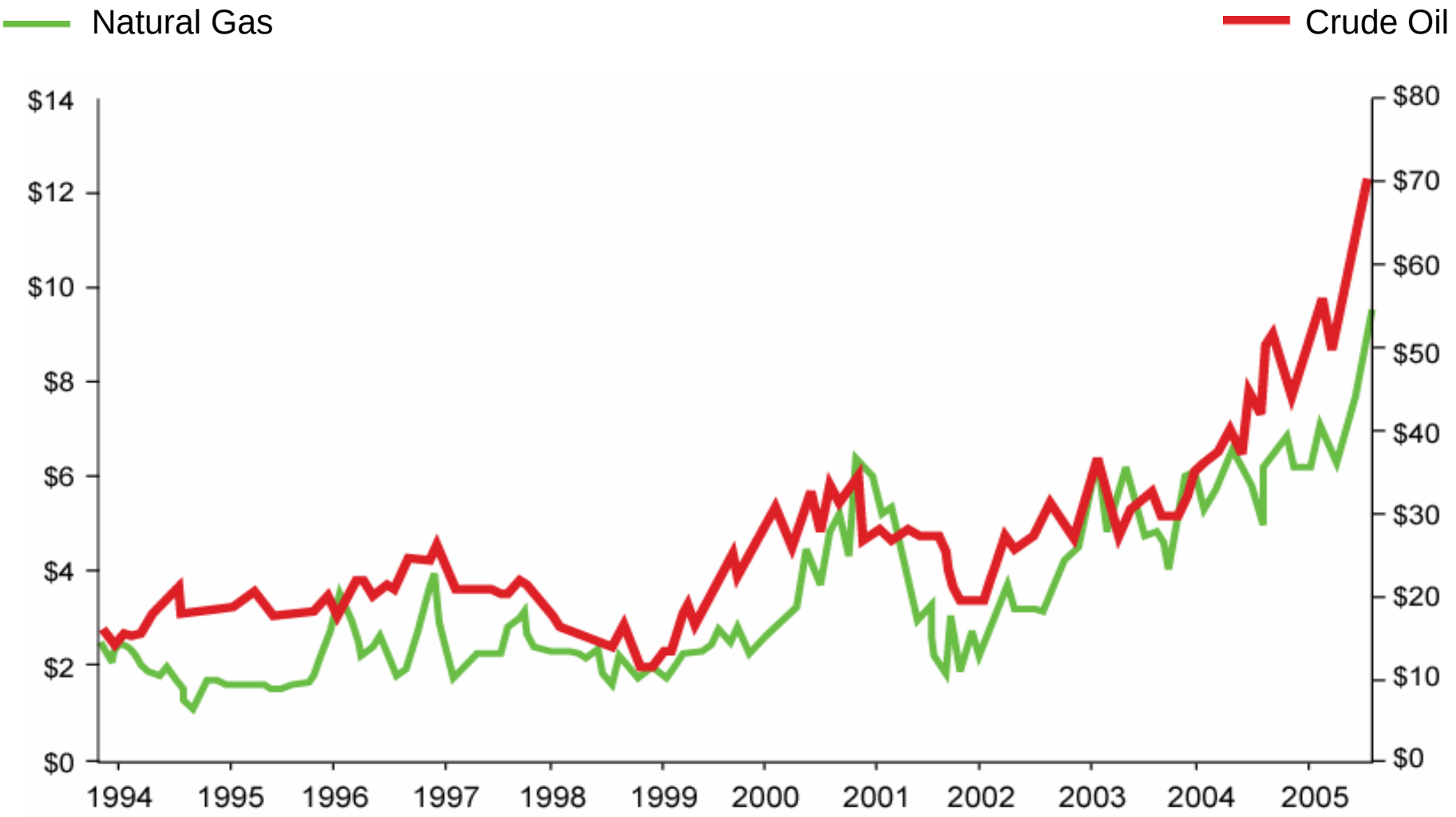
Natural Gas
Crude Oil
$14
$12
$10
$8
$6
$4
$2
$0
$80
$70
$60
$50
$40
$30
$20
$10
$0
1994
1995
1996
1997
1998
1999
2000
2001
2002
2003
2004
2005


10
20
30
40
50
60
70
80
90
100
0
kgf/cm²


Energy
More efficient
A
B
C
D
E
F
G
Less efficient
A

HSBC – Committed to becoming Carbon Neutral

Tesco – Pledge to cut energy use in half by 2010

UBS – 40% reduction in $C0_2$ by 2012

British Airways – Climate Care project launched


housing a low carbon society
an ODPM leadership agenda
on climate change
“green alliance...

Local Source
Heating and Cooling

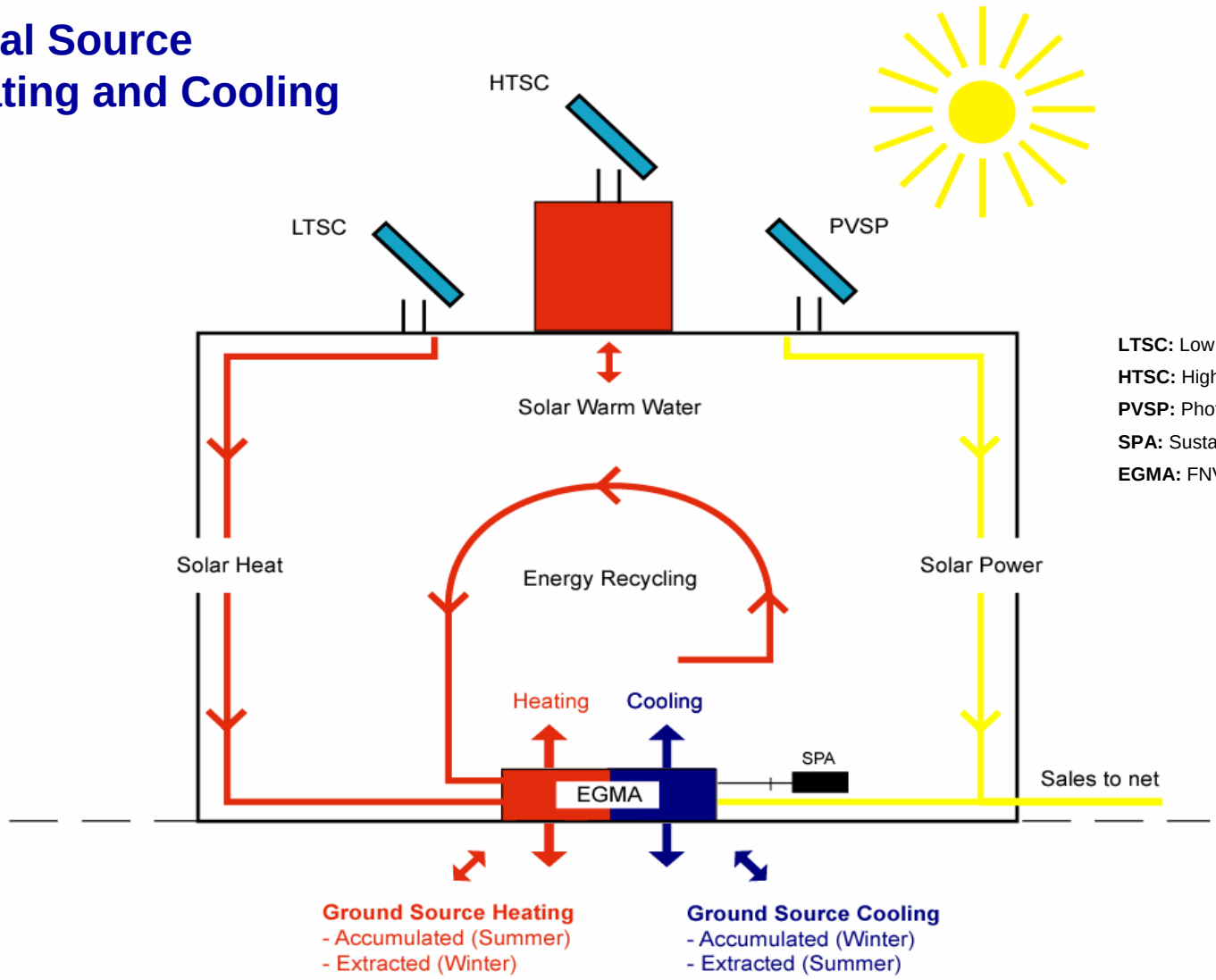

LTSC: Low Temperature Solar Collector
HTSC: High Temperature Solar Collector
PVSP: Photo Voltaic Solar Panel
SPA: Sustainable Power Aggregate
EGMA: FNV Patented “Energy Machine”


CNC

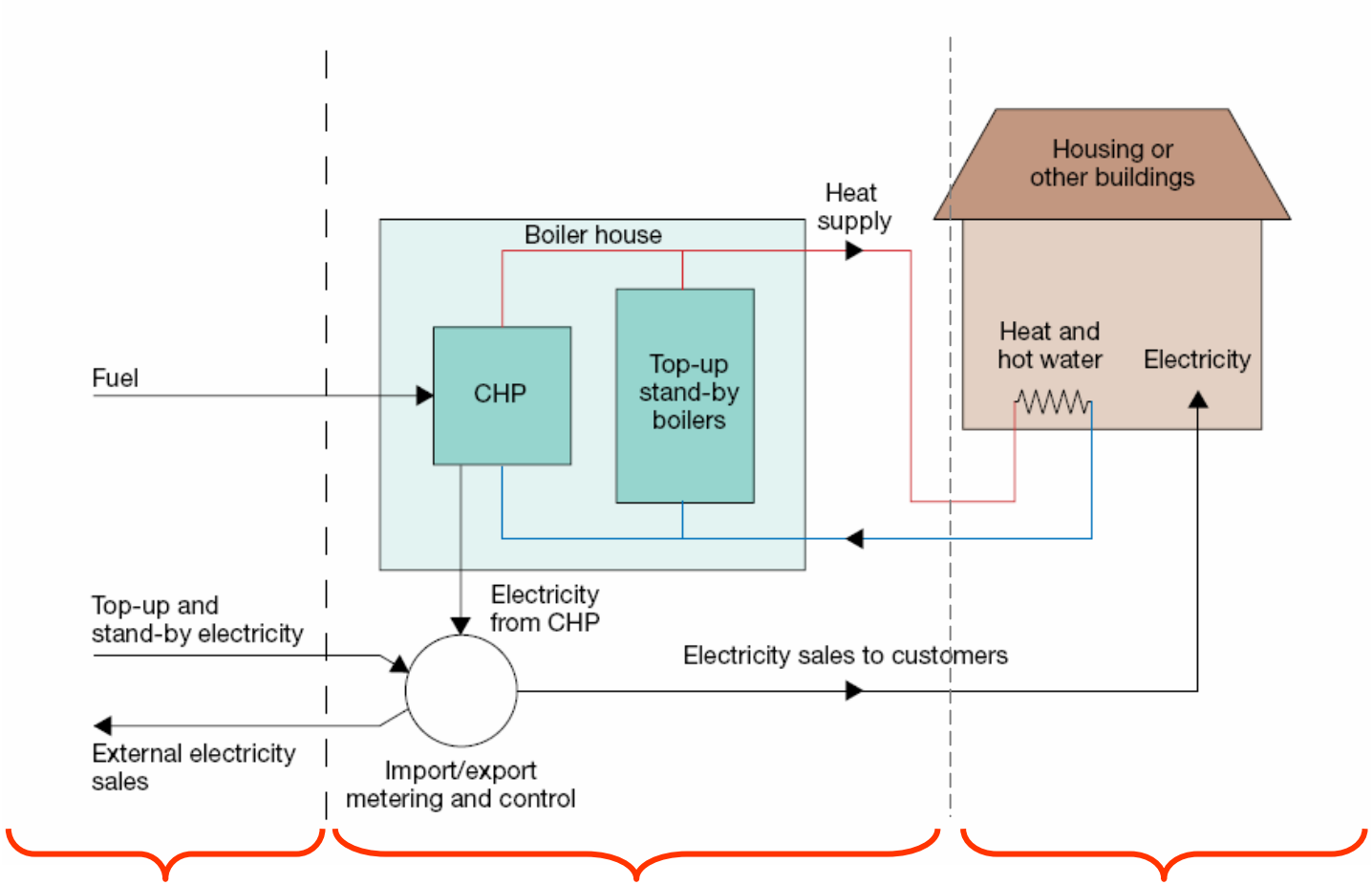

Regional infrastructure owned and maintained by Utility Company

Site distribution owned and maintained by Developer or Energy Services Company (ESCo), ie. Private Wire Network

Distribution within dwelling owned and maintained by Property Owner


TOYS R US





Thank you

The British Land Company PLC